Vertraulich / confidential

DIMENSIONS

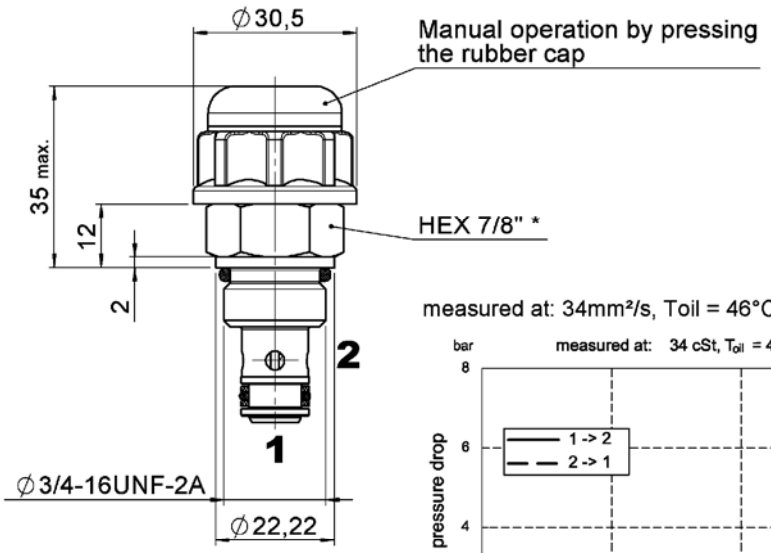

measured at: 34mm²/s, Toil = 46°C

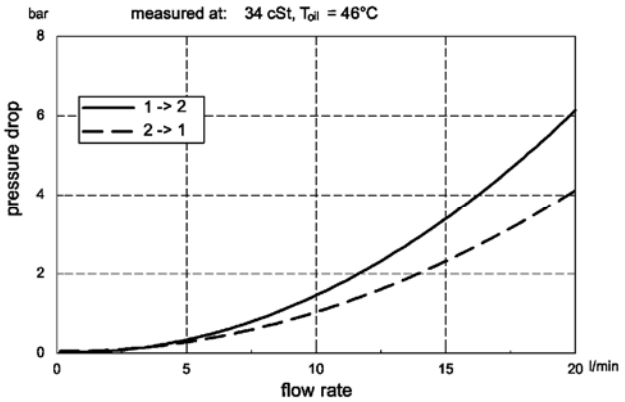

CAVITY FC08-2

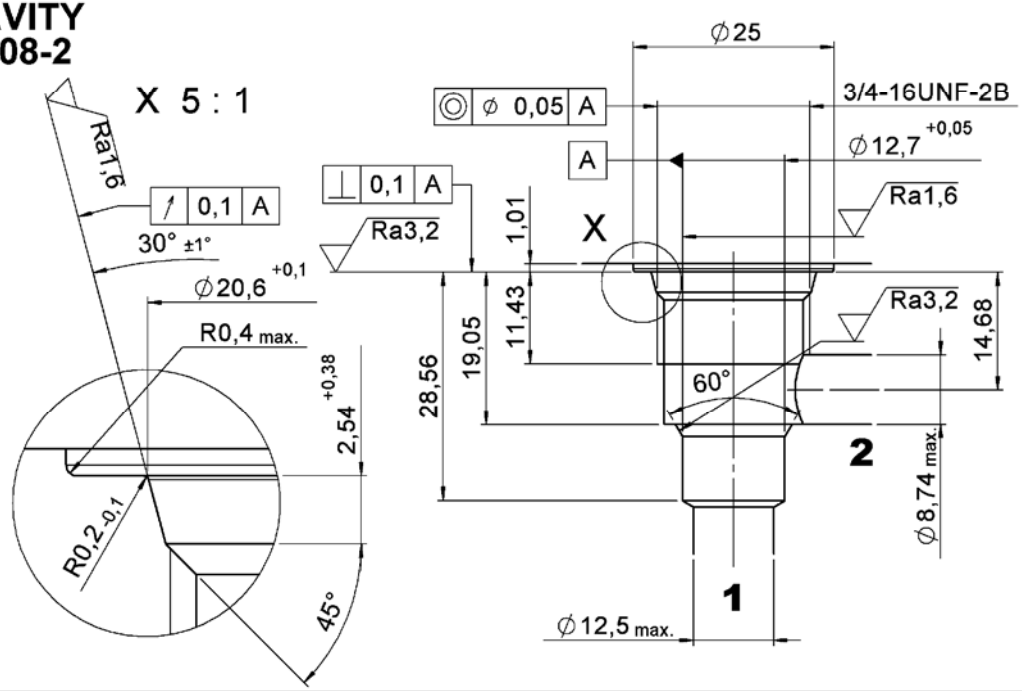

SPECIFICATIONS

2/2 Directional Valve, Poppet Type - Manually operated

Symbol

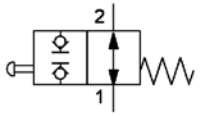

Model Code	HYDAC Part-No.
WS08V-01-C-N-M	4129432

Operating pressure: max. 350 bar
Flow: max. 20 l/min
Operating force: Thumb pressure (depending on pressure at port 1 approx.40-100N)
Media operating temperature range: -30 °C to +100 °C
Ambient temperature range: -30 °C to +100 °C
Fluids: Hydraulic oil to DIN 51524 part 1,2 and 3
Viscosity range: 7,6 mm²/s to 420 mm²/s is recommended
Filtration: Class 21/19/16 according to ISO 4406 or cleaner
Internal Leakage: Less than 5 drops/min at 350bar

Installation: no orientation restrictions
Materials: Valve body: carbon steel, ZnNi plated
Poppet: hardened and ground steel
Seals: NBR
Back-up rings: PTFE
Weight: Valve complete: 0,09 kg

*Torque:
Steel manifold (tensile strength > 460 N/mm²): 35 Nm
Aluminium manifold (tensile strength > 330 N/mm²): 30 Nm
(tool acc. to DIN EN ISO 6789, tool type II class A or B)
For further informations see brochure No. 53.000
"Conditions and instruction for valves"

Herewith we confirm to meet the basic and well-tried safety principles to ISO 13849-2:2013 chart C.1 and C.2.

The user is obliged to fulfil the requirements of the basic and well-tried safety principles for the installation and operation of the hydraulic components.

ALL DETAILS IN THIS SPECIFICATION ARE SUBJECT TO TECHNICAL MODIFICATION!

HYDAC ADA Version	Werkstückkanten Corners ISO13715			Oberflächenbeschaffenheit Surface quality	ISO 1302	Allgemeintoleranzen / General tolerances ISO 2768 - m	SIZE ISO 14405 (E)
						Form u. Lagetoleranz / Toleranzklasse Geometrical tolerances / Tolerance class	(H)
						Längenmaße / linear dimensions (mm)	
						über/over 0,5 3 6 30 120 400 1000; bis /to 3 6 30 120 400 1000 2000; ±0,1 ±0,1 ±0,2 ±0,3 ±0,5 ±0,8 ±1,2	
				Auftr.-Entw.-Projekt-Nr. Ord.-Devel.-Project-No	1:1	Werkstoff / Material	Masse / Mass 0,000
					Maßstab	Fertigmaße / Finished size	
Anz. No Vers. Vers.	gepr.am Chkd. on geänd. am Modif. on	gepr. von Chkd. by geänd. von Modif. by	Ä.M.Nr. Notice of change No	Teil / Part 000	Datum / Date	Name / Name	HYDAC FLUIDTECHNIK
				gez./Drawn	18.04.2016	JAKOBM	
				gepr./Chkd.	18.04.16	BILLM2	
Blatt von Sheet of 1 / 1	Benennung / Description MBL WS08V-01-C-N-M					Zeichn.-Nr Draw.-No	04137762
Format/Size A3						alte Mat Nr. /Old Mat No.	
SW-Vers. 2014						alte Dok Nr. /Old Doc No.	
						Ers. für /Exchange for	
						Ers. durch /Replaced by	

Schutzvermerk ISO 16016 beachten / Observing of protection notice ISO 16016

V7.1